# DS-2CD2543G2-I(WS)
# 4 MP AcuSense Fixed mini Dome Network Camera

AcuSense

Empowered by deep learning algorithms, Hikvision AcuSense technology brings human and vehicle targets classification alarms to front- and back-end devices. The system focuses on human and vehicle targets, vastly improving alarm efficiency and effectiveness.

- High quality imaging with 4 MP resolution
- Clear imaging against strong backlight due to 120 dB WDR technology
- Efficient H.265+ compression technology
- Focus on human and vehicle targets classification based on deep learning
- -S: audio and alarm interface available
- -W: Realizing Wi-Fi connection and easy installation
- Water and dust resistant (IP67) and vandal resistant (IK08)

## ▪ Specification

| | |
|---|---|
| **Camera** | |
| Image Sensor | 1/3" Progressive Scan CMOS |
| Max. Resolution | 2688 × 1520 |
| Shutter Speed | 1/3 s to 1/100,000 s |
| Min. Illumination | Color: 0.005 Lux @ (F1.6, AGC ON), B/W: 0 Lux with IR |
| Day & Night | IR cut filter |
| Angle Adjustment | Pan: -30° to 30°, tilt: 0° to 75°, rotate: 0° to 360° |
| **Lens** | |
| Lens Type | Fixed focal lens, 2.8 and 4 mm optional |
| Focal Length & FOV | 2.8 mm, horizontal FOV 104.3°, vertical FOV 55.9°, diagonal FOV 123.8°<br>4 mm, horizontal FOV 83.7°, vertical FOV 43.0°, diagonal FOV 100.3° |
| Lens Mount | M12 |
| Iris Type | Fixed |
| Aperture | F1.6 |
| Depth of Field | 2.8 mm: 1.4 m to ∞<br>4 mm: 1.6 m to ∞ |
| **DORI** | |
| DORI | 2.8 mm, D: 64 m, O: 25 m, R: 13 m, I: 6 m<br>4 mm, D: 85 m, O: 34m, R: 17 m, I: 9 m |
| **Illuminator** | |
| Supplement Light Type | IR |
| Supplement Light Range | Up to 30 m |
| Smart Supplement Light | Yes |
| IR Wavelength | 850 nm |
| **Video** | |
| Main Stream | 50 Hz: 25 fps (2688 × 1520, 1920 × 1080, 1280 × 720)<br>60 Hz: 30 fps (2688 × 1520, 1920 × 1080, 1280 × 720) |
| Sub Stream | 50 Hz: 25 fps (640 × 480, 640 × 360)<br>60 Hz: 30 fps (640 × 480, 640 × 360) |
| Third Stream | 50 Hz: 10 fps (1920 × 1080, 1280 × 720, 640 × 480, 640 × 360)<br>60 Hz: 10 fps (1920 × 1080, 1280 × 720, 640 × 480, 640 × 360)<br>*Third stream is supported under certain settings. |
| Video Compression | Main stream: H.265/H.264/H.265+/H.264+<br>Sub-stream: H.265/H.264/MJPEG<br>Third stream: H.265/H.264<br>*Third stream is supported under certain settings. |
| Video Bit Rate | 32 Kbps to 8 Mbps |
| H.264 Type | Baseline Profile/Main Profile/High Profile |
| H.265 Type | Main Profile |
| Bit Rate Control | CBR/VBR |
| Scalable Video Coding (SVC) | H.264 and H.265 encoding |
| Region of Interest (ROI) | 1 fixed region for main stream and sub-stream |

| | |
|---|---|
| **Audio** | |
| Environment Noise Filtering | Yes |
| Audio Sampling Rate | 8 kHz/16 kHz/32 kHz/44.1 kHz/48 kHz |
| Audio Compression | G.711ulaw/G.711alaw/G.722.1/G.726/MP2L2/PCM/MP3/AAC |
| Audio Bit Rate | 64 Kbps (G.711ulaw/G.711alaw)/16 Kbps (G.722.1)/16 Kbps (G.726)/32 to 192 Kbps (MP2L2)/8 to 320 Kbps (MP3)/16 to 64 Kbps (AAC) |
| **Network** | |
| Simultaneous Live View | Up to 6 channels |
| API | Open Network Video Interface (Profile S, Profile G), ISAPI, SDK |
| Protocols | TCP/IP, ICMP, HTTP, HTTPS, FTP, DHCP, DNS, DDNS, RTP, RTSP, NTP, UPnP, SMTP, IGMP, 802.1X (except for -W model), QoS, IPv6, UDP, Bonjour, SSL/TLS, PPPoE |
| User/Host | Up to 32 users. 3 user levels: administrator, operator and user |
| Security | Password protection, complicated password, HTTPS encryption, IP address filter, Security Audit Log, basic and digest authentication for HTTP/HTTPS, TLS 1.1/1.2, WSSE and digest authentication for Open Network Video Interface |
| Network Storage | NAS (NFS, SMB/CIFS), auto network replenishment (ANR) |
| Client | iVMS-4200, Hik-Connect, Hik-Central |
| Web Browser | Plug-in required live view: IE 10, IE 11<br>Plug-in free live view : Chrome 57.0+, Firefox 52.0+<br>Local service: Chrome 57.0+, Firefox 52.0+ |
| **Wi-Fi** | |
| Encryption Mode | -W: 64/128-bit WEP, WPA-EAP/WPA2-EAP, WPA-PSK/WPA2-PSK |
| Wi-Fi Protocol | -W:<br>802.11b: CCK, QPSK, BPSK<br>802.11g/n: OFDM |
| Frequency Range | -W: 2.4 GHz to 2.4835 GHz |
| Channel Bandwidth | -W: 20/40 MHz |
| Modulation | -W:<br>802.11b: CCK, QPSK, BPSK<br>802.11g/n: OFDM |
| Transfer Rate | -W:<br>802.11b: 11 Mbps<br>802.11g: 54 Mbps<br>802.11n: up to 300 Mbps |
| Wireless Range | -W: Up to 80 m (The performance varies based on actual environment) |
| **Image** | |
| Wide Dynamic Range (WDR) | 120 dB |
| SNR | ≥ 52 dB |
| Day/Night Switch | Day, Night, Auto, Schedule |
| Image Enhancement | BLC, HLC, 3D DNR |
| Image Parameters Switch | Yes |
| Image Settings | Rotate, mirror, privacy mask, saturation, brightness, contrast, sharpness, gain, white balance adjustable by client software or web browser |
| **Interface** | |
| Ethernet Interface | 1 RJ45 10 M/100 M self-adaptive Ethernet port |

| | |
|---|---|
| On-Board Storage | Built-in memory card slot, support microSD card, up to 256 GB |
| Built-in Microphone | Yes |
| Audio | -IS/IWS:<br>1 input (line in), two-core terminal block, max. input amplitude: 3.3 Vpp, input impedance: 4.7 KΩ, interface type: non-equilibrium<br>1 output (line out), two-core terminal block, max. output amplitude: 3.3 Vpp, output impedance: 100 Ω, interface type: non-equilibrium |
| Alarm | -IS/IWS:<br>1 input, 1 output (max. 12 VDC, 20 mA) |
| Reset Key | Yes |
| **Event** | |
| Basic Event | Motion detection (human and vehicle targets classification), video tampering alarm, exception |
| Smart Event | Line crossing detection, intrusion detection<br>Face detection |
| Linkage | Upload to FTP/NAS/memory card, notify surveillance center, trigger recording, trigger capture, send email |
| **Deep Learning Function** | |
| Perimeter Protection | Line crossing, intrusion<br>Support alarm triggering by specified target types (human and vehicle) |
| **General** | |
| Power | -IS:<br>12 VDC ± 25%, 0.45 A, max. 5.5 W, Ø5.5 mm coaxial power plug, reverse polarity protection<br>PoE: 802.3af, Class 3, 36 V to 57 V, 0.18 A to 0.11 A, max. 6.5 W<br>-IWS:<br>12 VDC ± 25%, 0.5 A, max. 6 W, Ø5.5 mm coaxial power plug, reverse polarity protection<br>PoE: 802.3af, Class 3, 36 V to 57 V, 0.19 A to 0.12 A, max. 7 W |
| Camera Material | Base: aluminum, cover: plastic |
| Camera Dimension | Ø110 mm × 57.4 mm (Ø 4.3" × 2.3") |
| Package Dimension | 134 mm × 134 mm × 108 mm (5.3" × 5.3" × 4.3") |
| Camera Weight | Approx. 380 g (0.8 lb.) |
| With Package Weight | Approx. 615 g (1.4 lb.) |
| Storage Conditions | -30 °C to 60 °C (-22 °F to 140 °F). Humidity 95% or less (non-condensing) |
| Startup and Operating Conditions | -30 °C to 60 °C (-22 °F to 140 °F). Humidity 95% or less (non-condensing) |
| Language | 33 languages: English, Russian, Estonian, Bulgarian, Hungarian, Greek, German, Italian, Czech, Slovak, French, Polish, Dutch, Portuguese, Spanish, Romanian, Danish, Swedish, Norwegian, Finnish, Croatian, Slovenian, Serbian, Turkish, Korean, Traditional Chinese, Thai, Vietnamese, Japanese, Latvian, Lithuanian, Portuguese (Brazil), Ukrainian |
| General Function | Anti-flicker, heartbeat, password reset via email, pixel counter |

| Approval | |
|---|---|
| RF | -W:<br>FCC ID (FCC Part 15.247(BT or 2.4G));<br>CE-RED (EN 301489-1 V2.1.1(BT or 2.4G); EN 301489-17 V3.1.1(BT or 2.4G); EN 300328 V2.1.1(BT or 2.4G); EN 62311:2008(BT or 2.4G)) |
| EMC | FCC (47 CFR Part 15, Subpart B)<br>CE-EMC (EN 55032: 2015, EN 61000-3-2: 2019, EN 61000-3-3: 2013+A1: 2019, EN 50130-4: 2011+A1: 2014)<br>RCM (AS/NZS CISPR 32: 2015)<br>IC (ICES-003: Issue 7)<br>KC (KN32: 2015, KN35: 2015) |
| Safety | UL (UL 62368-1)<br>CB (IEC 62368-1: 2014+A11)<br>CE-LVD (EN 62368-1: 2014/A11: 2017) |
| Environment | CE-RoHS (2011/65/EU)<br>WEEE (2012/19/EU)<br>Reach (Regulation (EC) No 1907/2006) |
| Electrical Safety Protection | IP67 (IEC 60529-2013)<br>IK8 (IEC 62262:2002) |

## ▪ Available Model

DS-2CD2543G2-IWS (2.8/4 mm)
DS-2CD2543G2-IS (2.8/4 mm)
DS-2CD2543G2-I (2.8/4 mm)
DS-2CD2543G2-IS (2.8 mm) (Black)

## ▪ Dimension

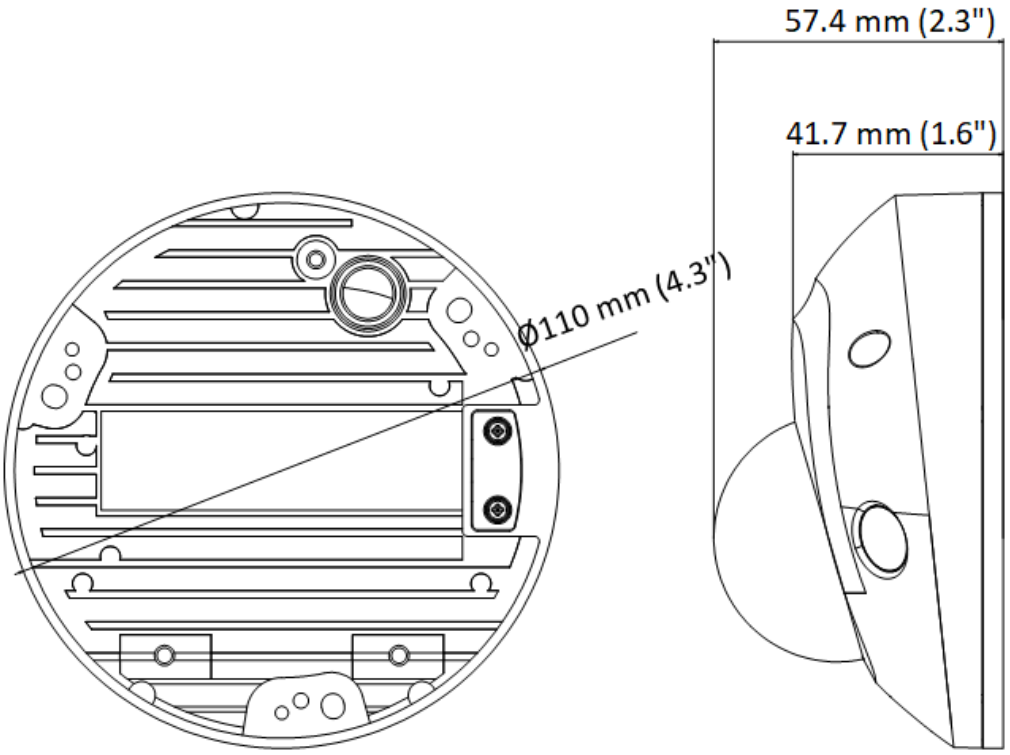


Unit: mm (inch)

## ▪ Accessory

### ▪ Optional

| | | | | |
|---|---|---|---|---|
| DS-1276ZJ-SUS (Black) Corner Mount | DS-1280ZJ-DM46 (Black) Junction Box | DS-1272ZJ-120 Wall Mount | DS-1280ZJ-DM46 Junction Box | DS-1275ZJ-SUS Vertical Pole Mount |
| | | | | |
| DS-1272ZJ-120B Wall mount | DS-1275ZJ-SUS(Black) Vertical Pole Mount | DS-1271ZJ-120(Black) Pendant Mount | DS-1276ZJ-SUS Corner Mount | DS-1271ZJ-120 Pendant Mount |

| | | | | |
|---|---|---|---|---|
| | | | | |

Distributed by


**Headquarters**
No.555 Qianmo Road, Binjiang District,
Hangzhou 310051, China
T +86-571-8807-5998
overseasbusiness@hikvision.com

**Hikvision USA**
T +1-909-895-0400
sales.usa@hikvision.com

**Hikvision Europe**
T +31-23-5542770
sales.eu@hikvision.com

**Hikvision UK & Ireland**
T +01628-902140
sales.uk@hikvision.com

**Hikvision UAE**
T +971-4-4432090
salesme@hikvision.com

**Hikvision Russia**
T +7-495-669-67-99
saleru@hikvision.com

**Hikvision Australia**
T +61-2-8599-4233
salesau@hikvision.com

**Hikvision Italy**
T +39-0438-6902
info.it@hikvision.com

**Hikvision South Africa**
Tel: +27 (10) 0351172
sale.africa@hikvision.com

**Hikvision Singapore**
T +65-6684-4718
sg@hikvision.com

**Hikvision Korea**
T +82-(0)31-731-8817
sales.korea@hikvision.com

**Hikvision India**
T +91-22-28469900
sales@pramahikvision.com

**Hikvision Brazil**
T +55 11 3318-0050
Latam.support@hikvision.com

**Hikvision France**
T +33(0)1-85-330-450
info.fr@hikvision.com

**Hikvision Spain**
T +34-91-737-16-55
info.es@hikvision.com

**Hikvision Poland**
T +48-22-460-01-50
info.pl@hikvision.com

**Hikvision Canada**
T +1-866-200-6690
sales.canada@hikvision.com

**Hikvision Turkey**
T +90 (216)521 7070- 7074
sales.tr@hikvision.com

**Hikvision Kazakhstan**
T +7-727-9730667
nikia.panfilov@hikvision.ru

**Hikvision Tashkent**
T +99-87-1238-9438
uzb@hikvision.ru

**Hikvision Indonesia**
T +62-21-2933759
Sales.Indonesia@hikvision.com

**Hikvision Thailand**
T +662-275-9949
sales.thailand@hikvision.com

**Hikvision Malaysia**
T +601-7652-2413
sales.my@hikvision.com

**Hikvision Vietnam**
T +84-974270888
sales.vt@hikvision.com

**Hikvision Hong Kong**
T +852-2151-1761
info.hk@hikvision.com

**Hikvision Colombia**
sales.colombia@hikvision.com


© Hikvision Digital Technology Co., Ltd. 2020 | Data subject to change without notice |

050511520210628