DS-1280ZJ-M

Junction Box for

Dome Camera

Features:

- Aluminum alloy material with surface spray treatment
- Waterproof design

Dimension:

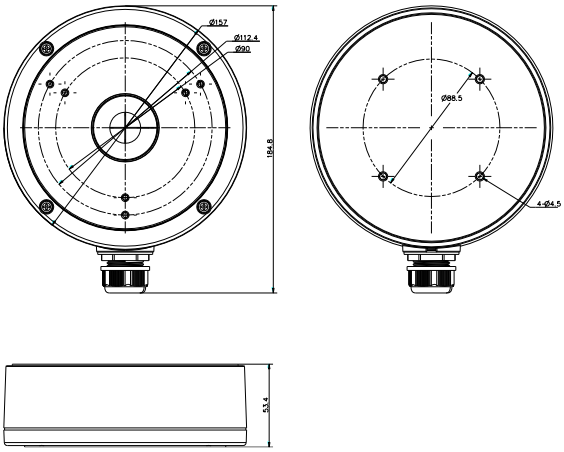

Order Model:

DS-1280ZJ-M

Parameter:

Model / Parameters	DS-1280ZJ-M
	Junction Box for Dome Camera
Appearance	Hikvision White
Material	Aluminum Alloy
Dimension	Φ 157×185×51.5mm
Weight	621g

Notice:

- The bracket should be installed on flat wall
- Waterproof rubber is necessary for outdoor application
- The wall must be capable of supporting over 3 times as much as the total weight of the camera and the mount.
- The maximum load capacity of the bracket is 4.5KG

Note: The actual dome camera may vary from the picture above.